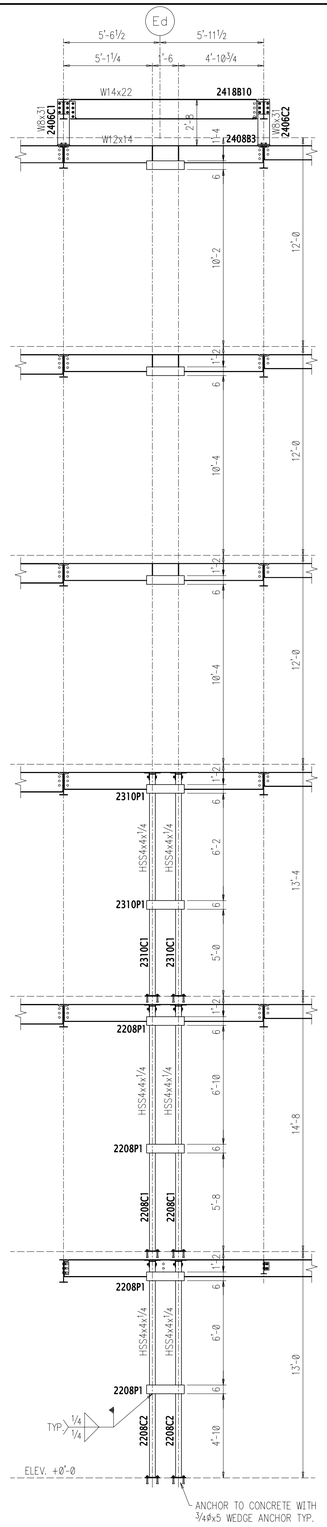

A
E2203
ELEVATOR GUIDE RAIL SUPPORT ELEVATION

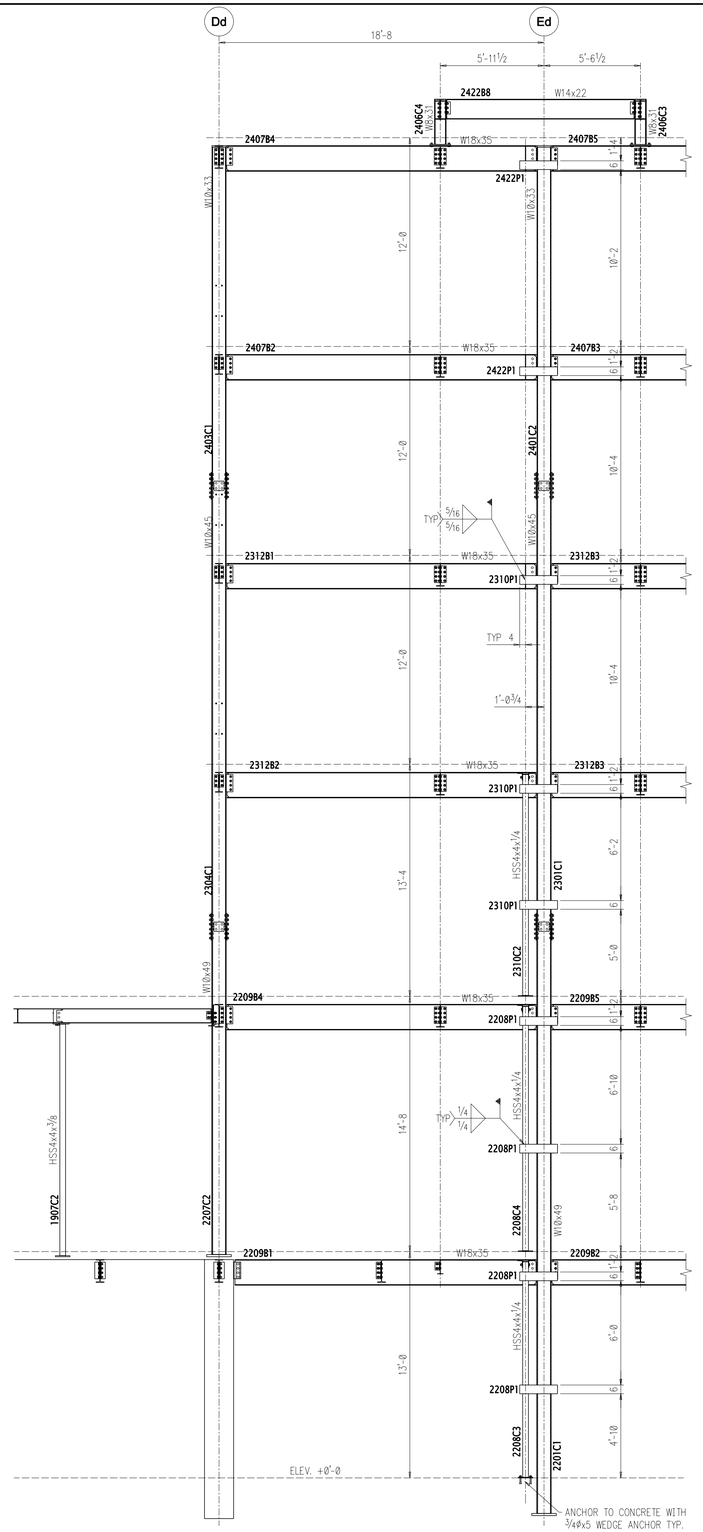

B
E2203
ELEVATOR GUIDE RAIL SUPPORT ELEVATION

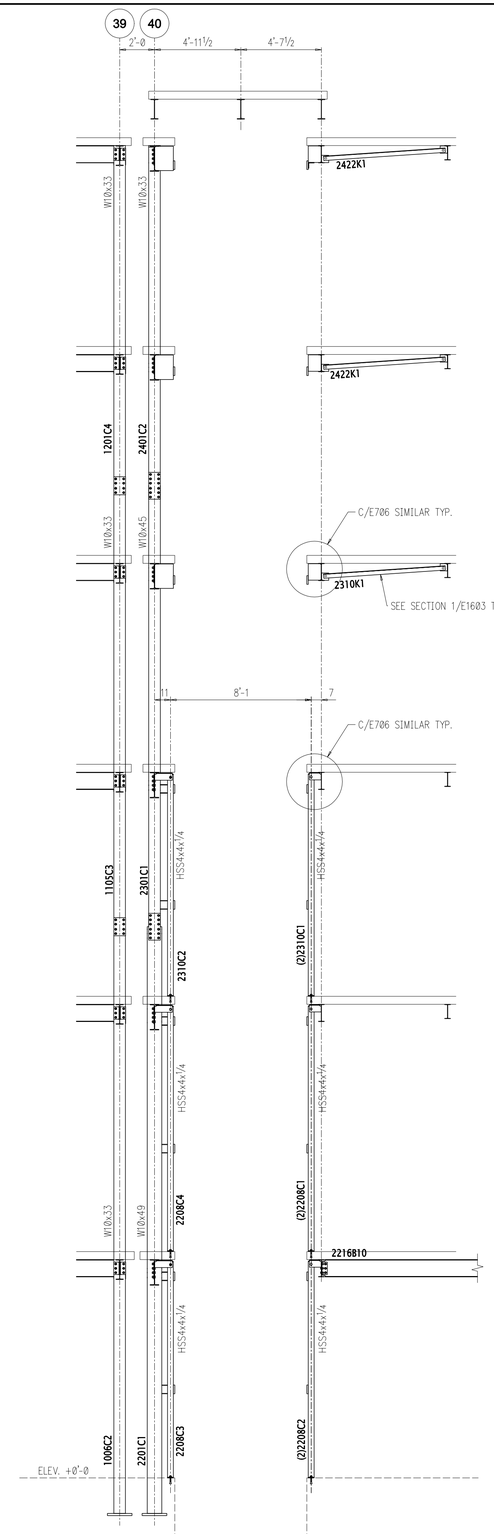

C-C
E2203
SECTION THROUGH ELEVATOR SHAFT

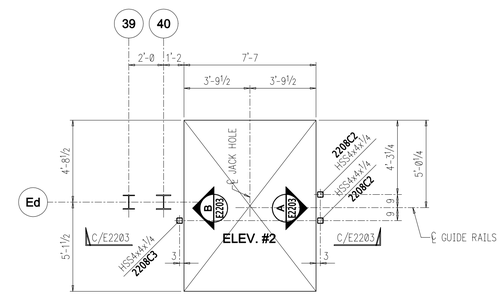

ELEVATOR GUIDE RAIL COLUMN LOCATION PLAN

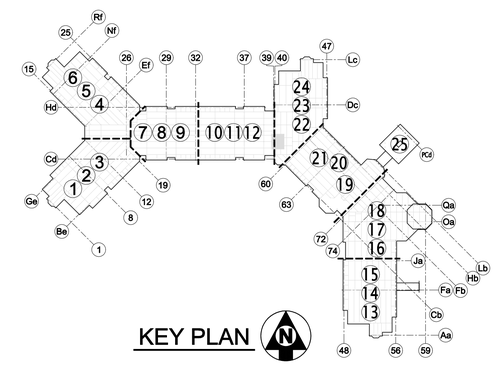

KEY PLAN

DRAWING ISSUE/REVISIONS		
NO.	DATE	DESCRIPTION
A	11/21/03	FOR APPROVAL
0	1/3/03	FABRICATION/FIELD USE

SHOP PAINT
HOLES UNLESS NOTED
BOLTS
FIELD CONNECTIONS

STEELFAB, INC.
P.O. BOX 19289
CHARLOTTE, NC 28219
(704) 394-5376

DWG. OF ELEVATOR GUIDE RAIL SUPPROTS
JOB NAME Givens Estates
LOCATION Asheville, NC
CUSTOMER Rodgers Builders
ARCHT. OR ENG. FreemanWhite
DRAWN BV DATE 11/03 CK'D DGD DATE 11/03

JOB NO: 22271

DWG. NO: E2203 0